Tagra | SD17 | 16x5.2mm | Roll On LED Diffuser | Opal | 10M

DIF-STD-OD-10M / ITM001317



Datasheet

23-10-2026

www.tagra-lighting.co.uk

support@tagra-lighting.co.uk

Tagra | SD17 | 16x5.2mm | Roll On LED Diffuser | Opal | 10M



Length	Material	Warranty
10m	PC	5 Years

SKU: DIF-STD-OD-10M
ITM: ITM001317

Key Features:

- **Dimensions (mm):** 16mm x 5mm x 10000mm
- **Diffuser Colour:** Opal
- **Dimensions (W x H x L):** 16 x 5 x 10000mm

Mechanical Data			
Diffuser Shape:	Flat	**Diffuser Transparency:**	80%
Illuminated Surface Width:	16mm	**Max. LED Strip Light Width:**	12mm
Product Weight:	330g	**Dimensions (LxWxH):**	10000 x 16 x 5mm

Photometric Data			
Beam Angle:	105°	**Diffuser Colour:**	Opal

Environmental Data			
Body Finish:	Semi-clear	**Body Material:**	Polycarbonate
Impact Protection (IK):	IK8	**Ingress Protection (IP):**	IP20

Dimension Drawing

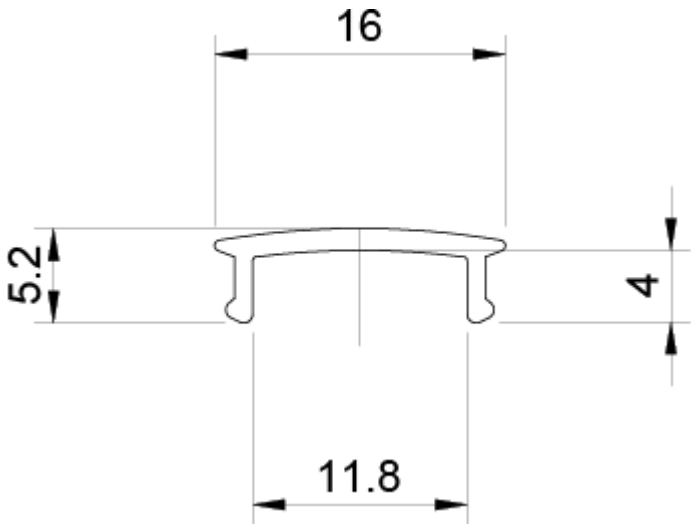

Packaging Data

Items / Sets Per Pack:	1	**Packaging Height:**	10mm
Packaging Length:	360mm	**Packaging Width:**	360mm
Packaging Weight:	330g		

Disclaimer

Tagra Lighting have taken reasonable care to ensure that the information in this datasheet is accurate at time of publication however it should be noted that all specifications are subject to tolerance. Descriptive specifications such as colour are subjective. Tagra Lighting reserve the right to update specifications without notice. The information in the datasheet may only be relied on by customers of Tagra Lighting in accordance with applicable terms and conditions.

Tagra Lighting is a trading name of T.R Ventures Limited, a company incorporated in England with registered number 07757720. Our registered office is Unit 2, Southfield Industrial Estate, Trafford Park, M17 1SJ.

www.tagra-lighting.co.uk

support@tagra-lighting.co.uk